DS-2CD4012FWD-(A)(P)(W)

1.3MP WDR Box Camera

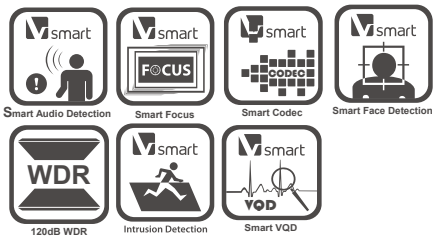

smart IPC



Key features

- Up to 1280 x 960 high resolution
- HD 720p video
- Smart Codec
- 120dB WDR, 3D DNR
- Triple streams
- On-board storage, up to 128GB
- Smart Focus: ABF (-A)
- Smart Facial Detection
- Smart Audio Detection
- Intrusion Detection
- Two way audio, built-in Mic
- Defog
- P-Iris optional (-P)
- People Counting
- Support Wifi (-W)

Dimension (unit: mm)

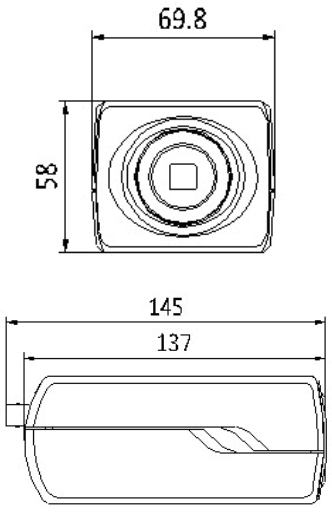

Available Models

DS-2CD4012FWD, DS-2CD4012FWD-A, DS-2CD4012FWD-W, DS-2CD4012FWD-P, DS-2CD4012FWD-AW, DS-2CD4012FWD-AP, DS-2CD4012FWD-PW, DS-2CD4012FWD-APW

* -A: Auto Back Focus
* -P: P-Iris
* -W: Support Wifi

Camera	
Image sensor	1/3" progressive scan CMOS
Min. illumination	Color: 0.01 lux@F1.2, AGC on B/W: 0.001 lux@F1.2, AGC on
Shutter time	1s ~ 1/100,000s
Slow shutter	Yes
Lens mount	C/CS mount
Auto iris	DC drive (-P: P-Iris)
Day & night	ICR (Auto/Schedule/Alarm Trigger)
Digital noise reduction	3D DNR
Wide dynamic range	120dB WDR
Smart Focus	Auto Back Focus *only for -A model
Compression standard	
Video compression	H.264+/H.264/MPEG4/MJPEG
H.264 codec profile	Baseline profile / main profile / high profile
Video bit rate	32 Kbps ~ 16 Mbps
Audio compression	G.711/G.722.1/G.726/MP2L2
Audio bit rate	64Kbps(G.711) / 16Kbps(G.722.1) / 16Kbps(G.726) / 32-128Kbps(MP2L2)
Image	
Max. resolution	1280 x 960
Frame rate	50 Hz: 25fps (1280 x 960), 50fps (1280 x 720) 60 Hz: 30fps (1280 x 960), 60fps (1280 x 720)
3rd stream	Independent setting, up to: 50Hz: 25fps (1280 x 960), 60Hz: 30fps (1280 x 960)
Image settings	Rotate mode, saturation, brightness, contrast, grayscale adjustable through client software or web browser
BLC	Yes, zone configurable
Picture overlay	128 x 128, BMP 24bit, zone configurable
Defog	Yes
EIS	Yes
ROI	Support
Network	
Network storage	NAS (Support NFS, SMB/CIFS)
Alarm trigger	Intrusion detection, motion detection, face detection, tampering alarm, defocus, network disconnect, IP address conflict, storage exception, line crossing detection
Protocols	TCP/IP, ICMP, HTTP, HTTPS, FTP, DHCP, DNS, DDNS, RTP, RTSP, RTCP, PPPoE, NTP, UPnP, SMTP, SNMP, IGMP, 802.1X, QoS, IPv6, Bonjour
Security	User authentication, watermark, IP address filtering, anonymous access
System compatibility	ONVIF, PSIA, CGI, ISAPI
Interface	
Audio input	1-ch 3.5mm audio interface, Mic in/Line in
Audio output	1-ch 3.5mm audio interface
Communication interface	1 RJ45 10M / 100M ethernet port, 1 RS-485 interface, 1 RS-232 interface
Alarm I/O	1/1
Video output	1 Vp-p composite output (75 Ω / BNC)
On-board storage	Built-in micro SD/SDHC/SDXC card slot, up to 128GB
Reset	Yes
General	
Operating conditions	-30°C ~ 60°C (-22°F ~ 140°F), humidity 95% or less (non-condensing)
Power supply	24VAC± 10%, 12 VDC ± 10%, PoE (802.3af)
Power consumption	Max. 6W (max. 9W with ICR on) -W: max. 7W (max. 10W with ICR on)
Dimensions	69.8 × 58 × 145 mm (2.68"x 2.56"x 5.70")
Weight	830g (1.83 lbs)